SI 90/85

Up date of CD Players A725

1. The new software 1.025.621.21 for CD Player A725 cures the following problems:

   - Intermittent muting of some CD's at non reproducable points.
   - Playing of CD's which do not start with track 1 (can happen on larger works which consist of 2 or 3 CD's.
   - Locating to tracks which begin very short time before lead out of the CD.
   - A selected display (for example: Track remaining time) will remain also when the disc drawer is unloaded and reloaded again.

2. Hardware modifications

2.1. Motor not starting when player is hot

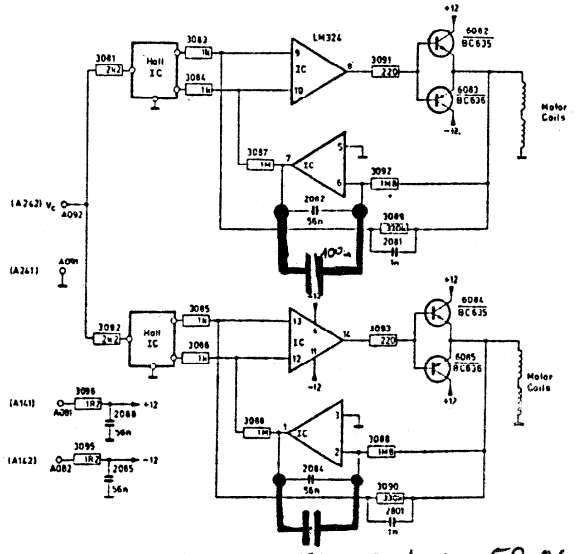

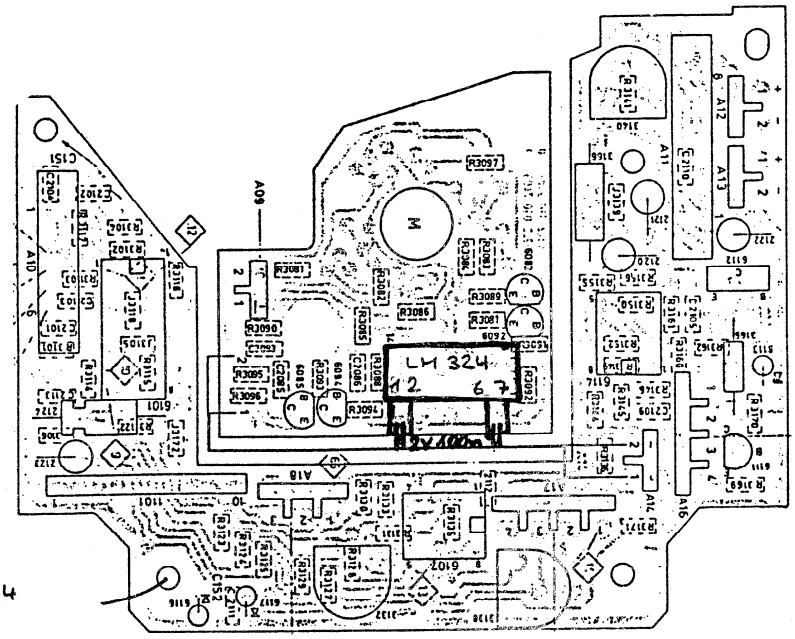

- Remove disc drive unit from CD-Player A725 (see Service instructions B225/A725 Section 2/1).
- Solder two 100 nF capacitors directly over pin 1 and 2 resp. 6 and 7 of IC LM 324 on disc drive pcb (see layout and schematic diagram above).
- Mount disc drive unit again

2.2. HIGH TEMPERATURE FAILURES OF A725

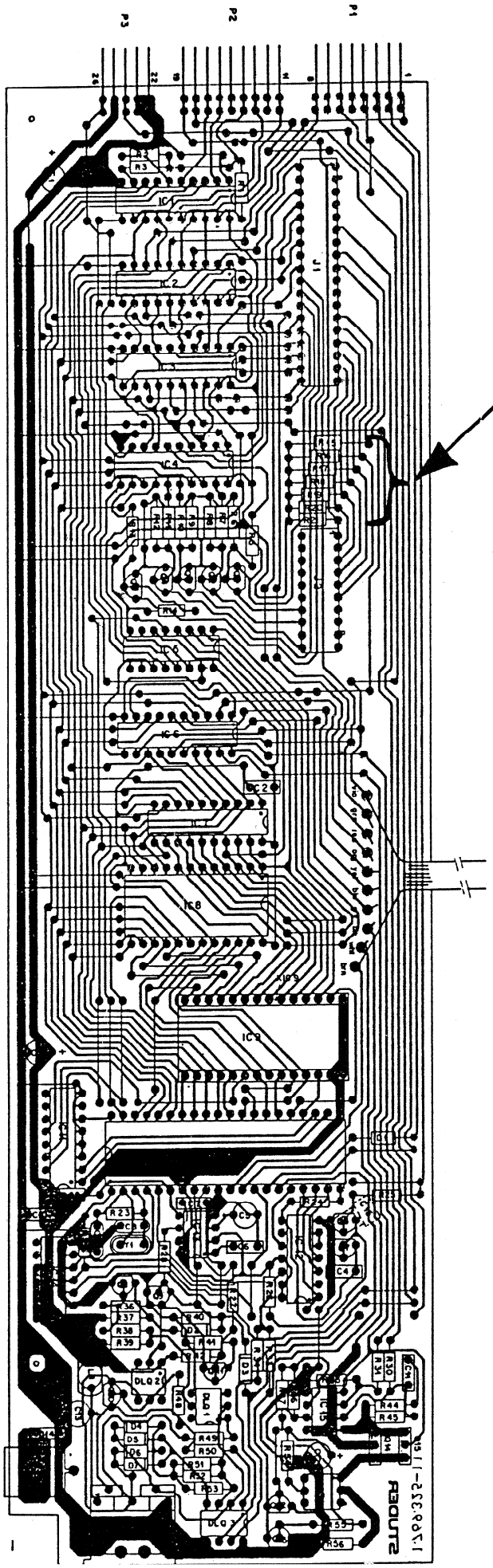

If CD-Players A725 happen to break down at high environment temperatures (above 40° C) in the way that they don't accept commands or reverse functions of push-buttons, you can replace the subsequently described 7 pull up resistors on µP pcb 1.769.325 by 820 ohm types instead of 4k7 types.

7x 820 Ω Ord. No: 57.11.4821
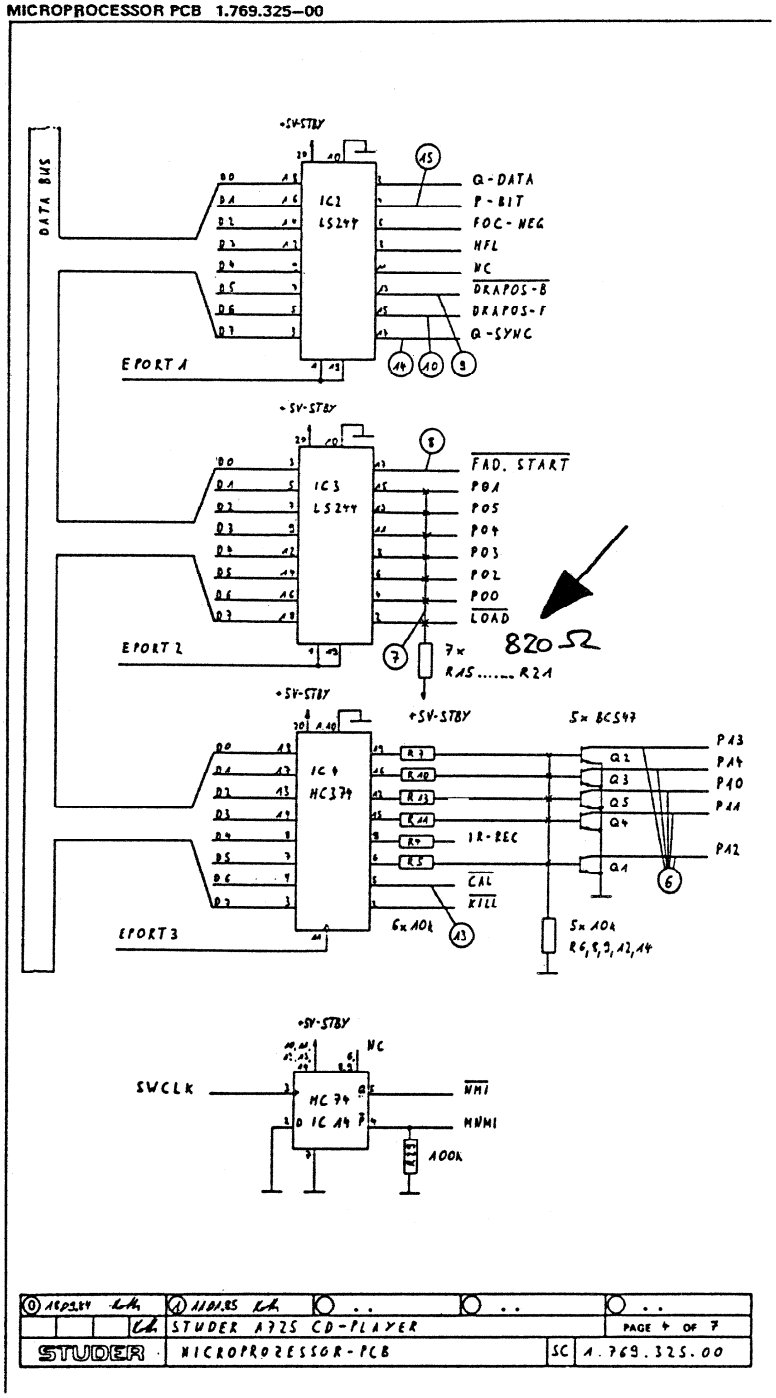
MICROPROCESSOR PCB 1.769.325–00